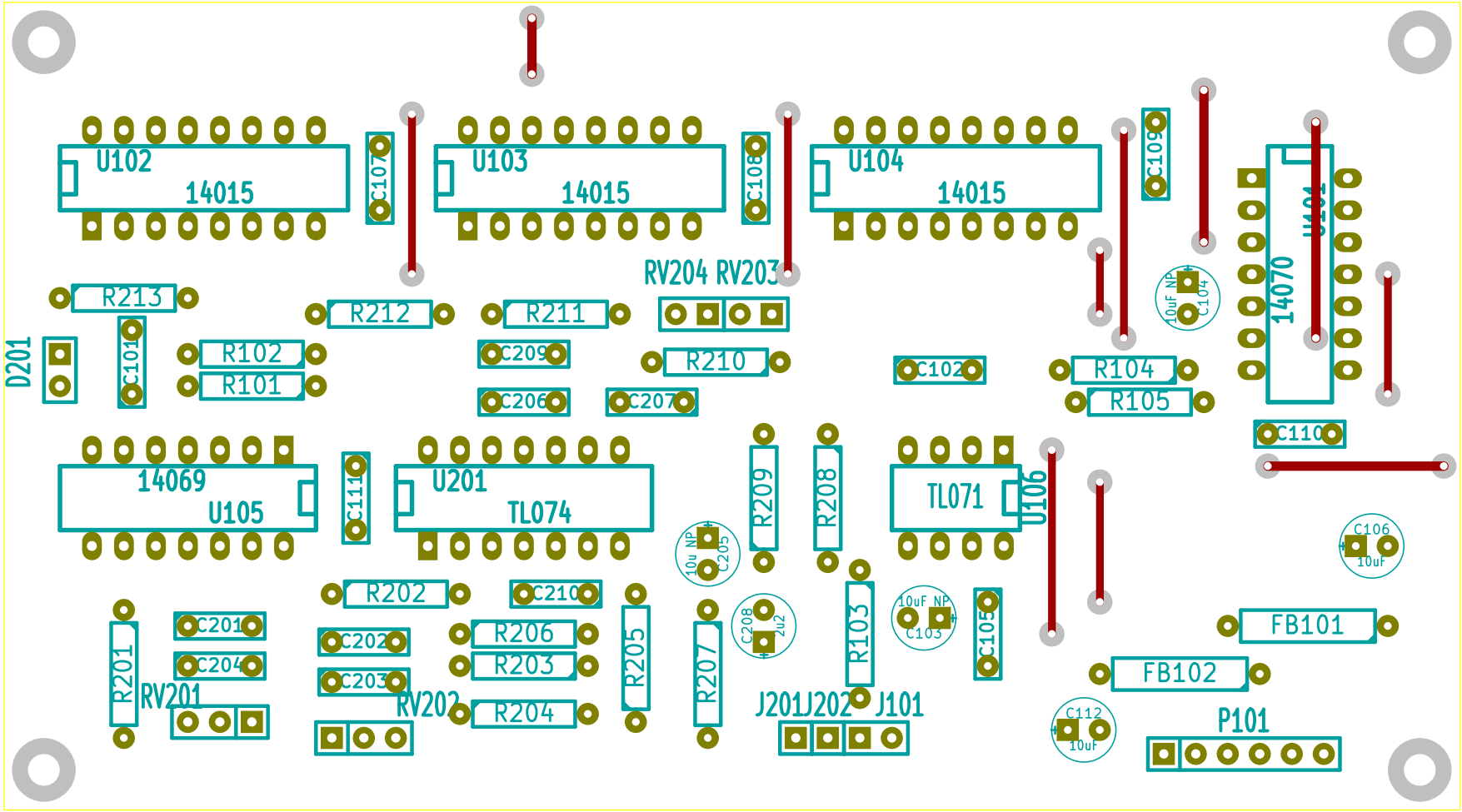
U102
14015
C107
U103
14015
C108
U104
14015
C109
U101
14070
RV204 RV203
R213
R212
R211
D201
C101
R102
R101
C209
R210
C206
C207
C102
R104
R105
10uF NP
C104
C110
14069
U105
C111
U201
TL074
R209
R208
TL071
U106
10u NP
C205
C106
10uF
R202
C210
C208
2u2
R103
10uF NP
C103
C105
FB101
FB102
R201
C201
C204
C202
C203
R206
R203
R204
R205
R207
RV201
RV202
J201
J202
J101
C112
10uF
P101